5600 SXT ELECTRONIC VALVE

SPARE PARTS

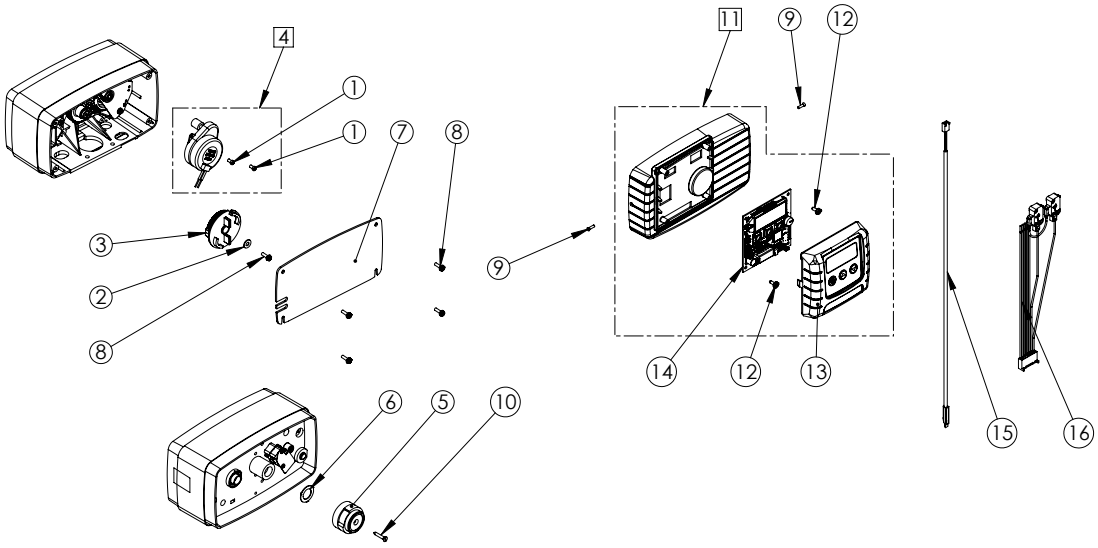

Power head 5600 SXT

Item	Reference	Description	Packing qty
1	11384SP	Screw PH 6-32x¼ Zinc - (50 pc)	1
2	12037SP	Plain Washer - (50 pc)	1
3	18722SP	Brine Cam DF/UF - (10 pc)	1
4	25329	Drive motor assy 24V/50Hz 2 RPM repl.kit	1
5	17438SP	Drive Cam DF Black - (10 pc)	1
	40609SP	Drive Cam Down Flow Blue Double backwash - (10 pc)	1
	17885SP	Drive Cam UF Red - (10 pc)	1
6	19079SP	Washer Friction - (10 pc)	1
7	13229-BLKSP	Back Cover Plastic Black 4600/5600/6600 - (10 pc)	1
8	13296SP	Screw - (50 pc)	1
9	13898SP	Screw Pgm Wheel - (50 pc)	1
10	15151SP	Screw Flat Head - (50 pc)	1
11	BU28723	front panel & label SXT	1
12	17020SP	Screw - (50 pc)	1
13	BU28714	Cover front panel & label SXT	1
14	BR43346-E0	Circuit board SXT programmed eco	1
15	BR19791-01	Turbine meter cable elec 0,450 m	1
16	BU28600	Wire harness power 4600/5000/5600	1

5600 SXT ELECTRONIC VALVE

SPARE PARTS

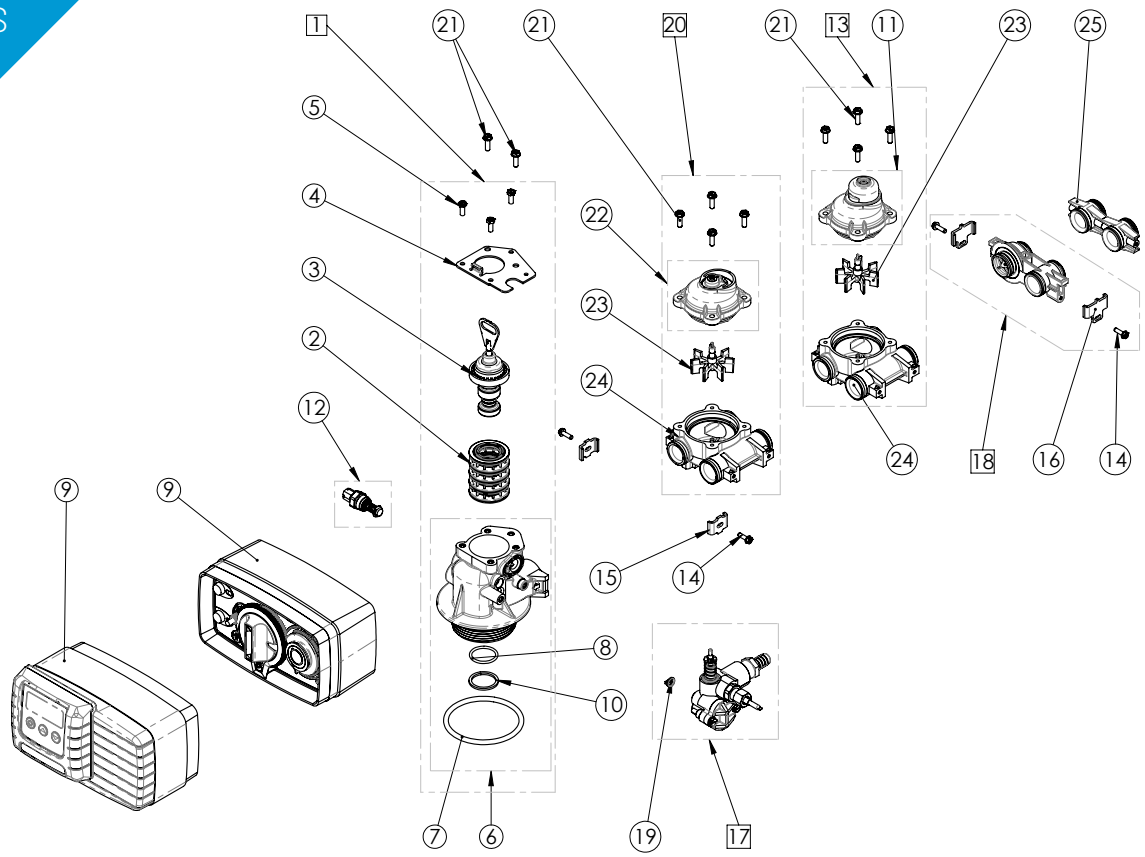

5600 SXT spare parts

Item	Reference	Description	Packing qty
1	BU28520-01	VB assy 5600 filter	1
	BU28520-02	VB assy 5600 w/ mixing	1
	BU28520-03	VB assy 5600 LWU w/ mixing	1
	BU28520-04	VB assy 5600 FR w/ mixing	1
	BU28520-06	VB assy 5600 SXT/6600/6700 DF mixing	1
	BU28520-07	VB assy 5600 SXT/6600/6700 UF	1
	BU28520-13	VB assy 5600SXT filter	1
2	24115	S&S kit resid	1
3	18928	Piston assy 4600/5600 filter	1
	24116	Piston assy 4600/5600	1
	24117	Piston assy 4600/5600 LWU	1
	18089	Piston assy 4600/5600 LWU FR	1
	24507	Piston assy 5600 UF	1
	27077	Piston assy 4600SE/5600SXT/6600/6700 DF	1
	25593	Piston assy 5600SXT/6600/6700 UF	1
4	BU13546	Plug retainer	1
5	12112SP	Screw Hex HD 10-24x1/2 - (50 pc)	1
6	28405-10	VB resid DF w/o mixing	1
	28405-20	VB resid DF mixing	1
	28405-30	VB resid UF w/o mixing	1
	28405-40	VB resid UF mixing	1
7	13304-01SP	O-ring 560 CD - (10 pc)	1
8	12281-01SP	O-ring Top of Tank 560 CD - (10 pc)	1

5600 SXT ELECTRONIC VALVE

SPARE PARTS

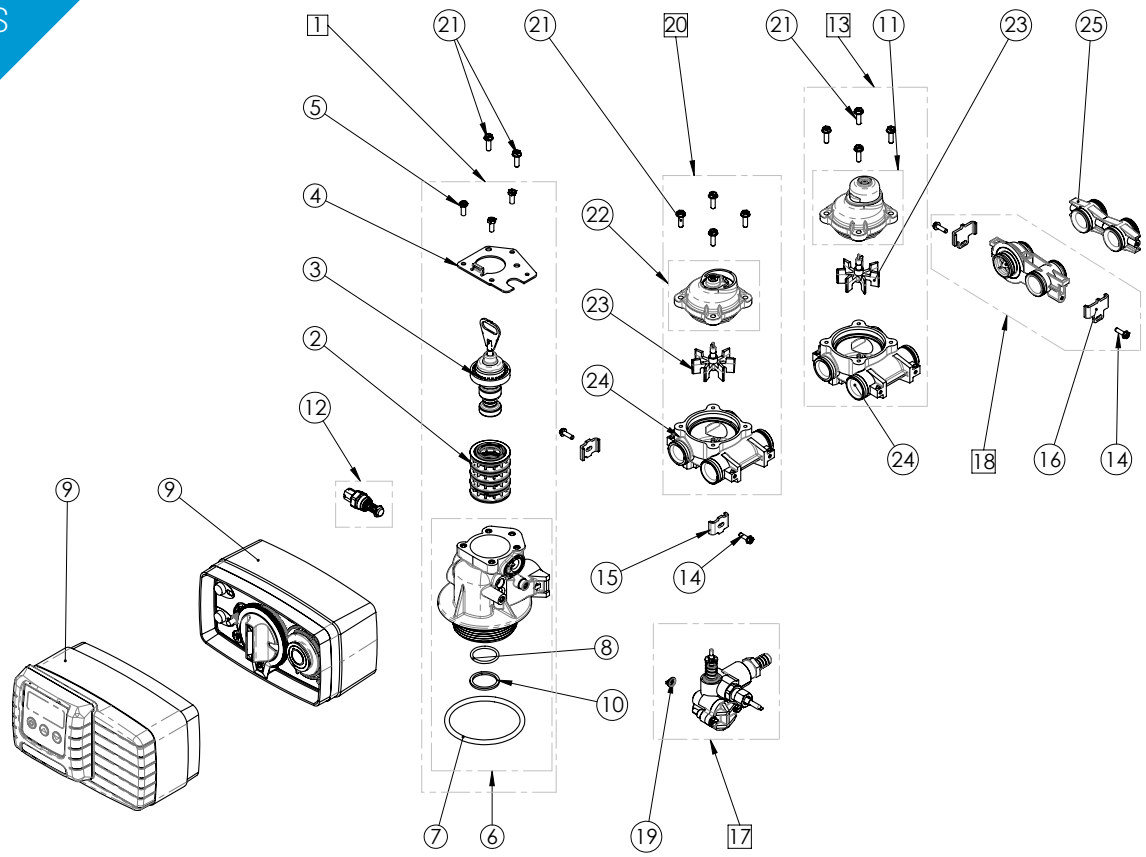

5600 SXT spare parts

Item	Reference	Description	Packing qty
9	VCPHRESID1	Power head 4600/5600 - See VC sub-assemblies section	
	PH56SE-001	PH 4600/5600 SE eco	1
	PH56SE-002	PH 4600/5600 SE TC	1
	PH56SXT-001	PH 4600/5600 SXT TC	1
	PH56SXT-002	PH 4600/5600 SXT TC UF	1
	PH56SXT-003	PH 4600/5600 SXT eco	1
	PH56SXT-004	PH 4600/5600 SXT eco UF	1
10	13030SP	O-ring Retainer Resid - (50 pc)	1
11	BR15659	Meter cover assy plastic extended 90°	1
12	24509-01	Mixing assy resid	10
13	25871	Meter assy ¾" extended plastic 90°	1
14	14202-01SP	Screw Adapt Clip 9000/9100 - (50 pc)	1
15	13255SP	Mounting Clip - (12 pc)	1
16	19569SP	Clip Flow Meter SXT - (12 pc)	1
17	VCINJ1	Injector residential - See VC sub-assemblies section	
18	60626-01	Meter assy ¾" turbine SXT	1
19	13497SP	Air Disperser - (50 pc)	1
20	24107	Meter assy ¾" 8 m^3 plastic	1
21	12473SP	Screw Hex Washer 10-24x⅝ 18-8SS - (50 pc)	1
22	BR14038	Cover meter assy plastic	1
23	13509SP	Impeller Meter Except 2" & 3" - (10 pc)	1
24	24102	Meter body assy ¾" & ring	1
25	13709	Coupling assy 2510/resid/9000	2